SIZE RANGE.GAMMA FORMATI

60x120 cm
24”x48”
rettificato . rectified

spessore . thickness 10 mm

60x60 cm
24”x24”
rettificato . rectified

spessore . thickness 10 mm

40x60 cm
16”x24”
rettificato . rectified

spessore . thickness 10 mm

30x60 cm
12”x24”
rettificato . rectified

spessore . thickness 10 mm

20x60 cm
8”x24”
rettificato . rectified

spessore . thickness 10 mm

Available in all colours. Disponibile in tutti i colori

COLOUR RANGE.GAMMA COLORI

Ever Moon | Ever Light | Ever Rock | Ever Earth | Ever Dark | Ever Artic

COLOUR-SHADING.STONALIZZAZIONE

Rock
Artic
Light
Moon
Earth
Dark

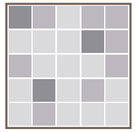

V2
Moderate
Moderata

V1
Light
Leggera

V2
Moderate
Moderata

V3
High
Alta

V4
Random
Random

SURFACE FINISH RANGE.GAMMA SUPERFICI

	Ever Moon	Ever Light	Ever Rock	Ever Earth	Ever Dark	Ever Artic		
Matt Matt							60x120 cm 24”x48” 20x60 cm 8”x24”	60x60 cm 24”x24” 40x60 cm 16”x24” 30x60 cm 12”x24”
Textured Strutturato							20x60 cm 8”x24”	60x60 cm 24”x24” 40x60 cm 16”x24” 30x60 cm 12”x24”
Honed Lappato							60x120 cm 24”x48”	60x60 cm 24”x24”

DECOR RANGE.GAMMA DECORI

Gamme décors / Sortiment Dekore / Gama decoraciones / Специальные элементы

Ever Moon Mosaico

30x30 cm
12”x12”

Ever Rock Mosaico

30x30 cm
12”x12”

Ever Dark Mosaico

30x30 cm
12”x12”

Ever Moon Brick

30x60 cm
12”x24”

Ever Rock Brick

30x60 cm
12”x24”

Ever Dark Brick

30x60 cm
12”x24”

Ever Light Mosaico

30x30 cm
12”x12”

Ever Earth Mosaico

30x30 cm
12”x12”

Ever Artic Mosaico

30x30 cm
12”x12”

Ever Light Brick

30x60 cm
12”x24”

Ever Earth Brick

30x60 cm
12”x24”

Ever Artic Brick

30x60 cm
12”x24”

DECOR RANGE.GAMMA DECORI

Gamme décors / Sortiment Dekore / Gama decoraciones / Специальные элементы

Metal Satin Listello 120
1,5x120 cm / 0.6”x48”

Metal Satin Angolo 1,5
1,5x1,5 cm / 0.6”x0.6”

Metal Satin Listello 60
1,5x60 cm / 0.6”x24”

Metal Lev. Listello 60
0,6x60 cm / 0.2”x24”

Metal Lev. Angolo 0,6
0,6x0,6 cm / 0.2”x0.2”

Metal Glossy Listello 60
0,3x60 cm / 0.1”x24”

TRIM TILES.PEZZI SPECIALI

Pièces spéciales / Spezialteile / Piezas especiales / Специальные элементы

INDOOR TRIM TILES

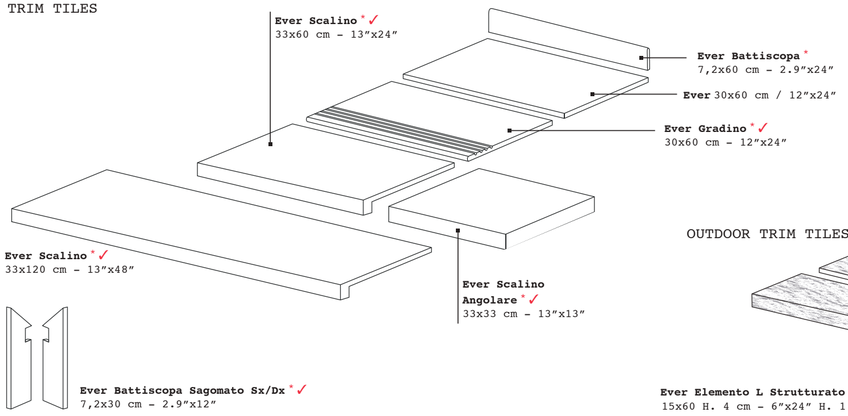

OUTDOOR TRIM TILES

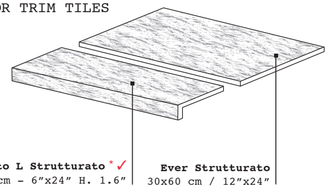

* Available in all colours / Disponibile in tutti i colori
Disponible dans toutes les couleurs / In allen Faben Verfügbar
Disponibles en todos los colores / имеются все цвета

✓ These parts are supplied to order / I pezzi sono disponibili su ordinazione
Les pièces sont disponibles sur commande / Die Teile sind auf Bestellung lieferbar
Las piezas se hacen por encargo / изготовляются на заказ